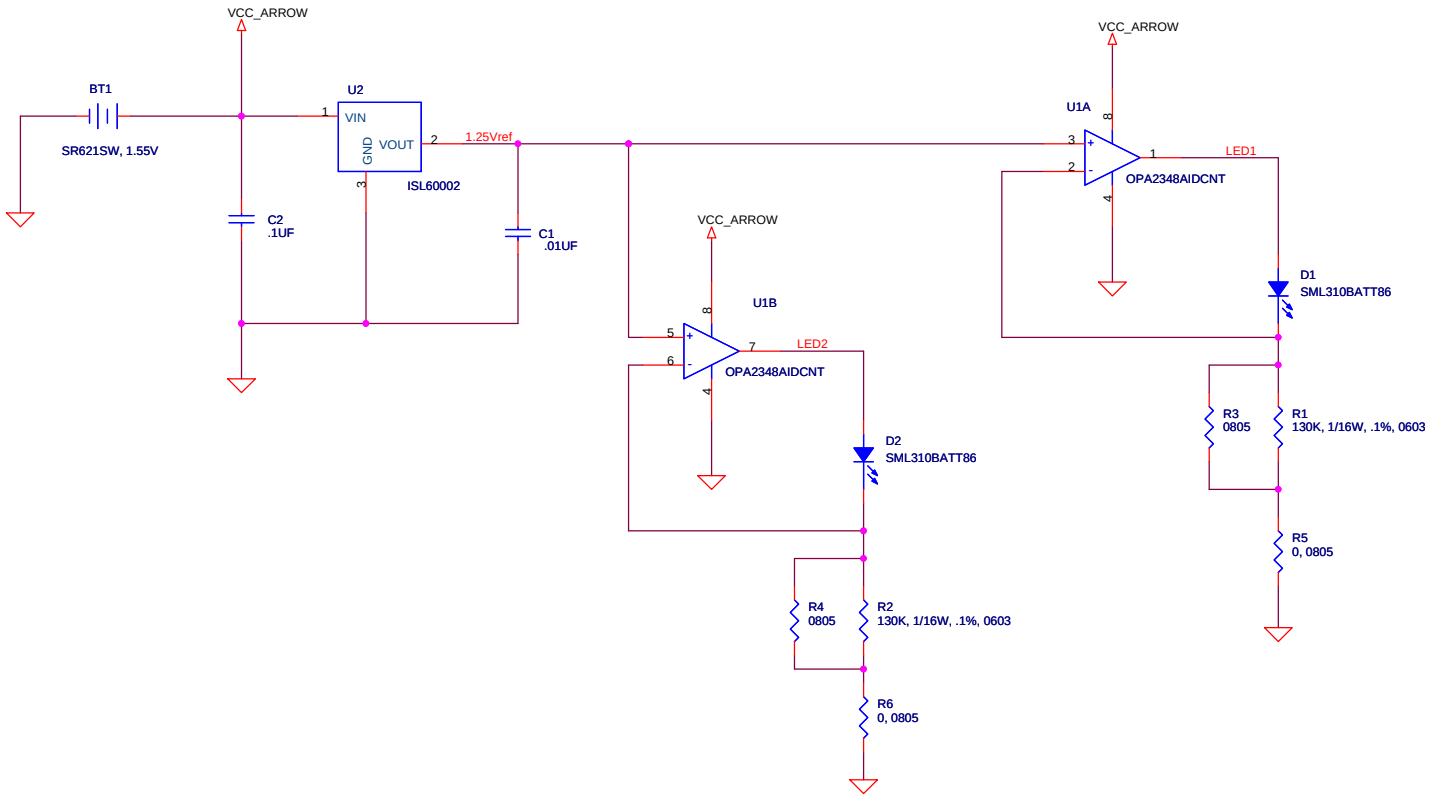

Title	Camera Calibrator Puck	
Size B	Document Number <Doc>	Rev A
Date: Thursday, November 29, 2007	Sheet 1 of 1	